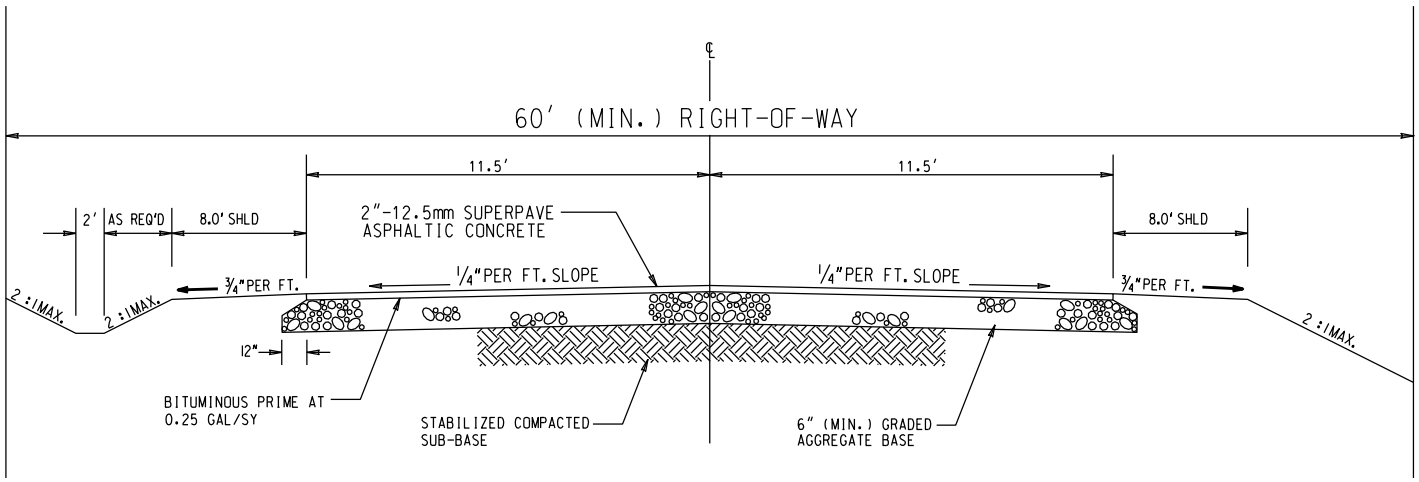

NOT TO SCALE

SCALE : NOT TO SCALE

RURAL RESIDENTIAL ROADWAY TYPICAL SECTION

FLOYD COUNTY, GEORGIA

ENGINEERING DEPARTMENT

12 E. 4TH AVENUE, SUITE 100
ROME, GEORGIA 30161

REV. 2008